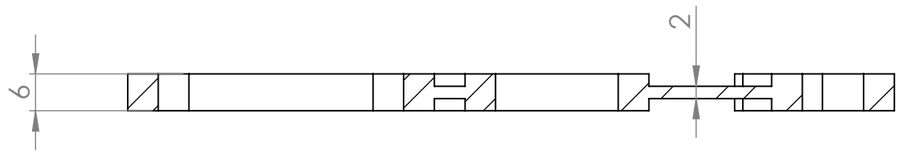

SECTION A-A

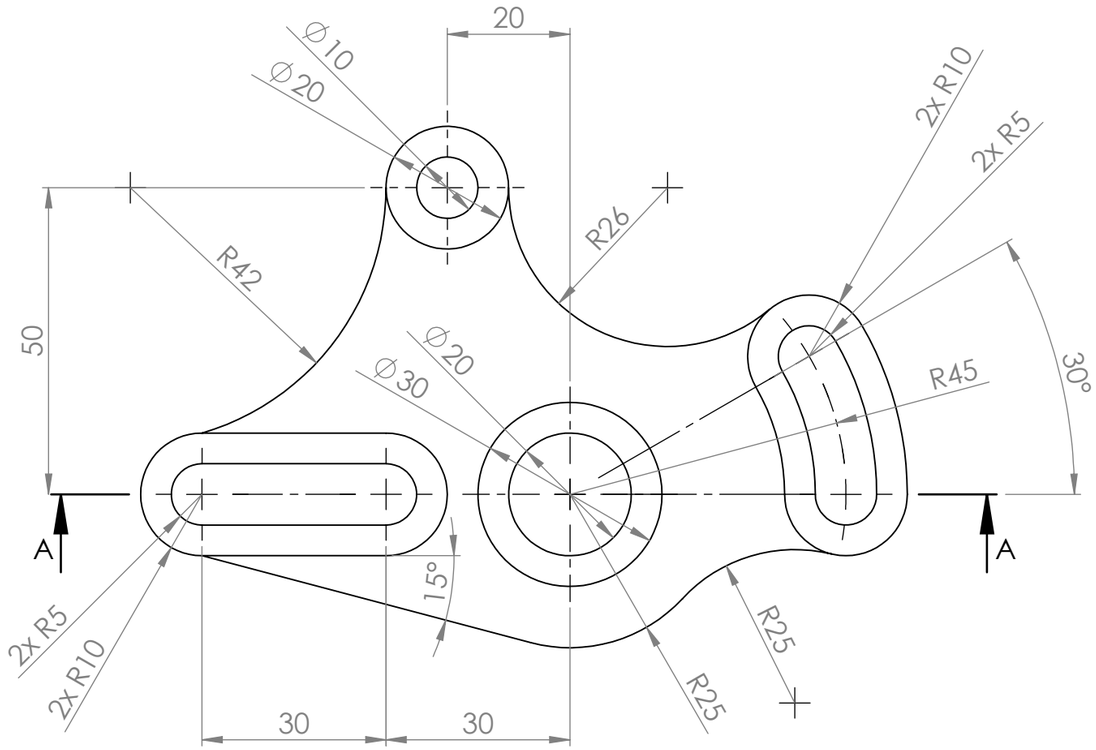

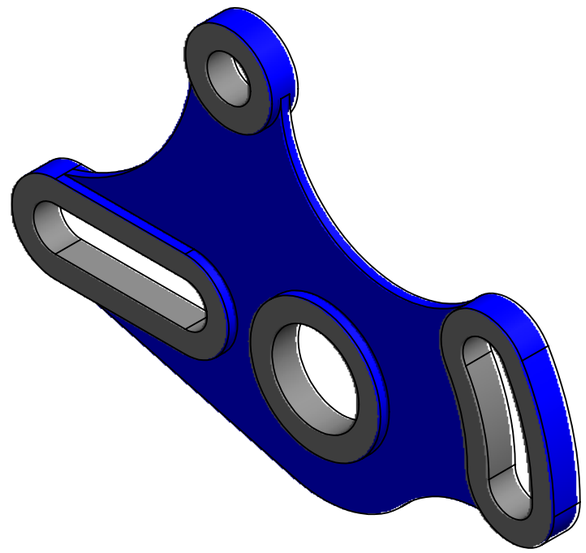

GENERAL TOLERANCE: ISO 2768-m		CREATED BY: Kartt	DATE: 17.11.2022	MATERIAL: AISI 304	
RESPONSIBLE DEP: Konetekniikka	TECHNICAL REF: Kartt	CHECKED BY: TK	DATE: 9.1.2023	DOCUMENT STATUS: Released	WEIGHT (KG): 0.12
Metropolia University of Applied Sciences		APPROVED BY: TK	DATE: 9.1.2023	DOCUMENT TYPE: Part Drawing	
		TITLE: Harjoitus Sketch		DWG NO. CA11-D	
				SIZE: A3 / SCALE: 1:1	SHEET: 1 / 1 / REV: A

SOLIDWORKS Educational Product. For Instructional Use Only.